MICROGRID DESIGN AND SIMULATION

Debashish Ghosh[1] and Abu Hena Md. Shatil

***Abstract*—** In this cutting-edge period, power is a basic need for all things and it applies to the electrical framework. Just as this circumstance the developing pace of the populace is expanding step by step. This kind of case made protection from offering total assistance in every single distant region and area in Bangladesh, particularly on the Island of St. Martin's. This paper shows a hybrid system to complete this service. MATLAB Simulink is used to perform the simulation. This system is divided into two loads and they are fixed load and dump load. For as usual load, Diesel Generator is perfect at the same time Battery Energy Storage System (BESS) can provide this complete service when diesel generator or diesel Genset is disabled. This problem has a permanent solution which is a model Microgrid Equivalent model. This model is also applicable to using a battery and it can remove a high amount of fuel consumption. The final result shows that the diesel little by little tasks the complete amount of load; the maximum frequency deviation which is decreased from 5 Hz to 2 Hz, the frequency restores from 2-2.5s. This microgrid system is the most advantageous and unrestricted for the proposed area.

***Keywords*—**Confined microgrid, Synchronous machine, Diesel generator, Battery energy storage system, Proportional Integral Derivative controller, Phase-Locked Loop.

I. INTRODUCTION

THE sources of conventional energy are oil, coal, and natural gas in the same time these ingredients are increasing economic progress. At this time the conventional energy sources rapid depletion and energy demands are increasing continuously. In 2012, this increment has grown 1.8%. At this time, some environmental conditions are not supported by some relevant organizations [1]. At the same time, they try to encourage intensive research for extra support with unconventional technology and it's all of the works completed from the green power plants. In this time pollution which is created from the environment and this all is increasing for this reason here use a technology which is known as the clean fuel mechanism, as well as modern energies sources, have to utilize and investigated. In the meantime, the economic support is lost because the fossil fuel and inexhaustible energy prices as well as the social and environmental costs are going forward at an increasing rate. But in this tie, this support is so mandatory for this environment. In the renewable energy sector, this future growth can take an unbelievable change. Inexhaustible energy increasing can guide us to reduce the greenhouse gas at the same time this document rate can improve the confined future depth weather and effect from the climate change, in a particular time, and expenditure-efficient transmission of energy. Find out in this inexhaustible energy can have efficient dividends for our energy security. Inexhaustible energy is repeatedly produced by nature and runs with sun energy (Such as melting, photolysis, and photo-electric), in a roundabout way from the sun (such as wind, hydroelectric power, and photosynthetic energy gathered in biomass), or from other natural movements and mechanisms of the environment (such as geothermal and tidal energy). Energy resources produced from fossil fuels, waste products from fossil sources, and waste products from inorganic sources are not included in renewable energy [2].

D. Ghosh completed his Master of Science in Electrical and Electronic Engineering from American International University-Bangladesh (AIUB), Dhaka. (email: *debashishghosh810@gmail.com*).

A. H. M. Shatil is with the Department of Electrical and Electronic Engineering (EEE), American International University - Bangladesh (AIUB), Kuril, Dhaka, Bangladesh. (email: *abu.shatil@aiub.edu*).

II. LITERATURE REVIEW

At this time energy has an essential part in this financial sector at the same time social improvement in Bangladesh. On the other hand, the ease of the open sector to electricity cannot give a perpetual, reasonable, and staunch system. Bangladesh has advertised specifically 62% contact to this electricity (including the inexhaustible energy) and the propagation of this electricity per capita is only 332 KWh [3], [4]. In Bangladesh, there are a lot of places, particularly in off-grid zones relevant to Saint Martin Islands have no right of entry to a constituent power source. The supply amount of energy to faraway areas in a justifiable approach is an elementary necessity at present because of the reduction of fossil fuel assets, fuel rate acceleration related to typical energy generation, population increase rate, and unsatisfactory waste clearance conveniences.

As well, as a result of this international alertness of this universal warming and the scarcity of the

transmission of this natural gas, oil, inexhaustible energy-based power plants have been transformed into encouraging replacements and have been rising promptly. In Bangladesh government is expenditure significantly on this inexhaustible energy and has acquainted with inexhaustible energy policy and in this time, this is also anticipating implementing energy-based power plants to gain 10% amount of the total demand for power by 2020 [5]. For supplying electricity their smartest sections from all of the energy sources are the photovoltaic solar and the wind generation units, as well as this electricity, can fulfill the demand of this remote and isolated area for their luxurious energy demand. Photovoltaic solar and wind generation units are the smartest selections for supplying electricity to rural and remote areas where utility lines are luxurious to acquaint with because of the landscape [6], [7].

For fossil fuel resources, huge attention is captured by renewable energy resources. All types of energy for both future and present energy demand this Renewable energy sources can complete this all demand of the residential load and the cellular network [8]. Despite the potential benefits, harvesting renewable energy poses certain obstacles because of the effective nature of sustainable energy sources and their high installation costs as compared to traditional non-renewable energy sources [9]. Combining renewable and non-renewable energy sources can solve this challenge and improve the supply system's reliability. In addition, to solve these issues, a new method known as hybridization of renewable energy sources has been implemented [10]. The utilization of these sustainable energy sources in hybrid mode, which includes a variety of inexhaustible energy and energy gather technologies, can be done both with and without the grid. Hybridization of renewable energy sources must prove to be a popular solution, particularly for supplying electricity to rural and remote locations. Because of the intermittent source and the inability of renewable sources to supply a continuous and uninterrupted source of electricity, the framework of this energy storage system can be combined as alternate sources. When additional generation from renewable sources is possible, the extra power can be gathered in an energy storage system or sent to the advantageous grid. Hybridization of renewable energy sources has several advantages, including lowering COE**,** lowering CO2 emissions, and providing competitively priced electricity in rural areas and on islands [11]. Overall, the traits meet the social, economic, and environmental requirements of sustainable development. The population is increasing every day, and demand is increasing as well. Electricity is the most important ingredient nowadays. Electronic technology is at the heart of the modern period. Electricity is no longer a pipe dream. However, some areas are currently experiencing a shortage of electronics, which is causing a significant problem. The availability of gadgets in the distant area is sorely lacking.

This isolated area must connect to the electrical grid to remedy this problem. This paper provides a comprehensive solution to the problem. At the current moment, microgrids are widely used in a variety of settings. The microgrid is a power-saving technology that is employed in a variety of settings, including hospitals, banks, educational institutions (colleges, schools, and so on), shopping malls, and pilot exhibitions. Microgrids are being used in all centers, banks, and pilot display locations in business-related marketplaces. It is propelled by mechanical advancements, which come at a reasonable cost, are validated, and increase recognition, among other things. In most cases, the microgrid is utilized to increase the prominence and strength of intensity frames. It deals with the development of conveyed clean vitality assets like wind and sunlight-based age to reduce petroleum derivative emissions and provide power in areas without an integrated electrical grid. This study provides a comprehensive view of the microgrid, including all current microgrid controllers, specialized applications, challenges, and prospects [12].

III. The Site And Load Analysis

In Bangladesh's northwestern part and the Bay of Bangle's smallest part is known as Saint Martin Island with an area of only 3.37 square kilometers as well as it is approximately the southernmost portion of this Bangladesh it's around 9 km formed by the point of the Cox's Bazar - Teknaf peninsula. This Saint Martin Island is also related to the northeast part of Myanmar and it's situated around 7 km, at the mouth of the Naf River as depicted in Figure 1. The Statistics and Information Division, Ministry of Planning, Government of the People's Republic of Bangladesh give some data about the division of Census, in Bangladesh situated approximately 6,703 number of population with 850 households [13]. The electric energy interest per year was investigated at about 1168 MWh [13]. The Bangladesh Power Development Board launched a 30-kW diesel generator on Saint Martin Island, but it is no longer operational. On this Island's all of the people completed their energy interest by spending kerosene, coconut, and palm or by other biomass materials as well as some of the profitable shops and hotels completed their electricity exaction by a diesel generator.

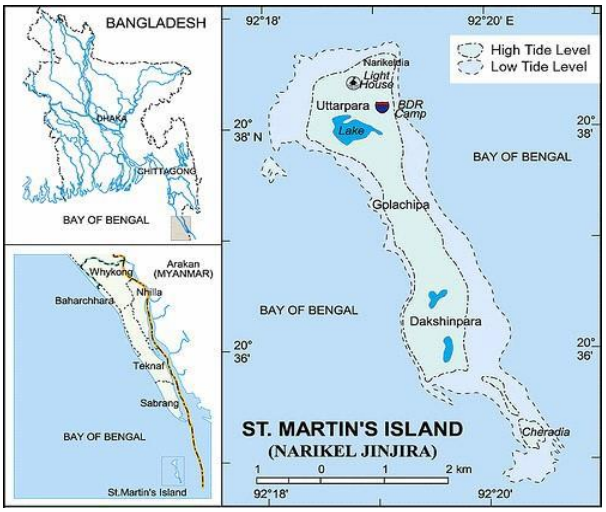

Fig. 1. Saint Martin island [14]

On this island, here situated a school who are completed secondary education at the same time here situated in a health clinic [13].

A. *Field Survey*

This island cannot use the electricity grid because this island is situated in the middle portion of the Bay of Bangle. Some privately owned generators operate for four hours each day, from 6 p.m. to 10 p.m. In these areas, all of the people completed their all electricity demand from these connections of the generator lines. This type of electrical demand is not so sufficient because this electricity demand is only applicable for one light and one small fan with four hours as well as this BDT rate of 20 per day to run such a tiny load. For the majority of inhabitants on the island, the high electrical charge is a significant burden. Hence, after sunset, the majority of the island is covered in darkness. Because of this condition, the security situation of the area is highly hampered. Only a small percentage of people have Solar Home Systems installed in their homes.

B. *Estimation of Primary Load*

In this subsection, the primary load of the Island is calculated for summer and winter. The summer stays from March to October and the winter stays from November to February. Under the two seasons, the location's principal demand is estimated to be 850 families, 15 hotels, 100 stores, 1 school, and 1 hospital.

1) Household Load: The individual households were assumed to use 3 units of 30 W lights for 6 hours between 5 pm-11 pm, 2 units of 80 W fan in operation from 6 pm to 6 am, and TV of 30 W is to be in operation in each household on average basis starting from 6 pm to 10 pm in Summer. The detail of the load for households is presented in Table I.

TABLE I
ENERGY CONSUMED BY THE HOUSEHOLDS

			Summer		Winter	
Appliance	**Quantity**	**Capacity (W)**	**Duration of Operation (hrs/day)**	**Energy Consumed (Watt.hr/day)**	**Duration of Operation (hrs/day)**	**Energy Consumed (Watt.hour/day)**
CFL	3	30	6	540	8	720
Fan	2	80	12	1920	0	0
TV	1	30	4	120	4	120
Total Load (for one house)		**280 W**	**2580 Wh/day**		**840 Wh/day**	
Total Load for 850 houses		**238 kW**	**2193 kWh/d**		**714 kWh/day**	

TABLE II
ENERGY CONSUMED BY THE HOTELS

			Summer		Winter	
Appliance	**Quantity**	**Capacity (W)**	**Duration of Operation (hrs/day)**	**Energy Consumed (Watt.hr/day)**	**Duration of Operation (hrs/day)**	**Energy Consumed (Watt.hour/day)**
CFL	3	30	6	540	7	630
Fan	1	80	7	560	0	0
TV (standard hotels)	1	30	4	120	4	120
Total Load (for 15 hotels)		**27000 W**	**171000 Wh/day**		**100500 Wh/day**	
Total Load (for 15 hotels)		**27 kW**	**171 kWh/d**		**100.5 kWh/day**	

2) Hotel Load: Table II implies that a single room (standard hotel) power consumption in summer =1220 watt-hour/day and in winter = 750 Watt-hour/day. For a single room (economy hotel) power consumption in summer = 1100 Watt-hour/day and in winter = 630 Watt-hour/day. In Saint Martin Island, 5 standard hotels, 10 economy hotels and 10 rooms in each hotel. Power consumption for 5 standard hotels in summer =61000 watt-hour/day and in winter = 37500 Watt-hour/day. Power consumption for 10 economy hotels in summer = 110000 watt-hour/day and in winter = 63000 Watt-hour/day. Total Load for 15 hotels = 171000 Watt-hour/day (summer) and 100500 watthour/day (winter)

3) Commercial Load: On this island there situated around 100 shops as well as most of these shops are authorized by some residents of this island. As usually all of the regular shops spend their electricity by utilizing 80 W's a fan and 30 W's a light. These two materials are used with a small-time because the fan uses 10 am to 10 pm, on the other hand, the light uses only the evening time 6 pm to 10 pm which is only 4

hours in the time of summer. The detail of the load for households is presented in Table III.

TABLE III
ELECTRIC LOAD CONSUMPTION OF A SHOP

			Summer		Winter	
Appliance	**Quantity**	**Capacity (W)**	**Duration of Operation (hrs/day)**	**Energy Consumed (Watt.hr/day)**	**Duration of Operation (hrs/day)**	**Energy Consumed (Watt.hour/day)**
CFL	1	30	4	120	5	150
Fan	1	80	12	960	0	0
Total Load (for 1 shop)	**110 W**	**1080 Wh/day**			**150 Wh/day**	
Total Load (for 100 shops)	**11 kW**	**108 kWh/d**			**15 kWh/day**	

4) School Load: Advanced technology-based education or high-powered education is an essential matter for all of the community because it is a special sector for the socio-economic development of one country. On this island, a primary school is situated for their requirement and it allows up to class 5 students which are known as primary school. In this project, here assumed 20 numbers of lights that are 30 W's and 5 numbers of 80 W's fan as well as this duration is 6 hours each day 9 am to 3 pm. This applies to all of the schools on this island. The detail of the load for schools is presented in Table IV.

TABLE IV
SCHOOL ELECTRICAL LOAD CONSUMPTION

			Summer		Winter	
Appliance	**Quantity**	**Capacity (W)**	**Duration of Operation (hrs/day)**	**Energy Consumed (Watt.hr/day)**	**Duration of Operation (hrs/day)**	**Energy Consumed (Watt.hour/day)**
CFL	20	30	6	3600	6	3600
Fan	5	80	6	2400	0	0
Total Load (for 1 school)	**1 kW**	**6 kWh/d**			**3.6 kWh/day**	

5) Health Clinic Load: In this Saint Martin, a common health clinic is situating which can provide some basic service for simple illnesses of these surrounding people. In this place, the main equipment is LED lights, some fans, a microscope for the laboratory, and a vaccination for the freezer. Simple assumptions of this health clinic are 5 number LED lights (30 W) which continue 9 am - 4 pm (7 hours), 3 number of fans (80 W) which continue 9 am - 4 pm (7 hours). This is the main fact that this health clinic is accoutered with 1 unit and this is possible by 30W microscope in the same time this is work for 4 hours. The detail of the load for health clinics is presented in Table V. Table VI also includes a summary of the overall load for Saint Martin Island.

TABLE V
HEALTH CLINIC ELECTRICAL LOAD CONSUMPTION

			Summer		Winter	
Appliance	**Quantity**	**Capacity (W)**	**Duration of Operation (hrs/day)**	**Energy Consumed (Watt.hr/day)**	**Duration of Operation (hrs/day)**	**Energy Consumed (Watt.hour/day)**
CFL	5	30	7	1050	7	1050
Fan	3	80	7	1680	0	0
Vaccine Freezer	1	70	24	1680	24	1680
Microscope	1	30	4	120	4	120
Total Load	**0.49 kW**	**4.53 kWh/d**			**2.85 kWh/day**	

TABLE VI
TOTAL LOAD CALCULATION

Different Types of Load	**Load (kW)**	**Total Consumption (kWh/day)**	
		Summer	**Winter**
Domestic load	238	2193	714
Hotel load	27	171	100.5
Commercial load	11	108	15
School load	1	6	3.6
Health clinic load	0.49	4.53	2.85
Total Load	**277.49**	**2482.53**	**835.95**

IV. MODELING OF THE SYSTEM

If this described system represents the diesel-battery Microgrid system. This system constructs with the diesel engine, proportional integral derivative controller, switch, memory and load, battery. In this mechanism, a discrete simulation type is used, and, in this system, the detention time is 50e-6/2.5 s. Here used the digital clock where the value of this clock is 0.1 and this clock is connected with switch 1. In this paper, an accompaniment input and a subtractive memory are given and used as the sum of this value. The additive data comes from memory and the subtractive data, and it is fixed value 50. This output is connected with switch 1. After this phenomenon, the output value from switch 1 is spent for the proportional–integral–derivative controller. From this proportional–integral–derivative controller, the output is given, and this output is also connected with the Iref connection of the battery. In these connections, the a,b, and c of this battery is linked with the connection of a,b, and c of this Diesel engine, at the same time its loads are also connected correspondingly. This equivalent system-related description is analysis in later.

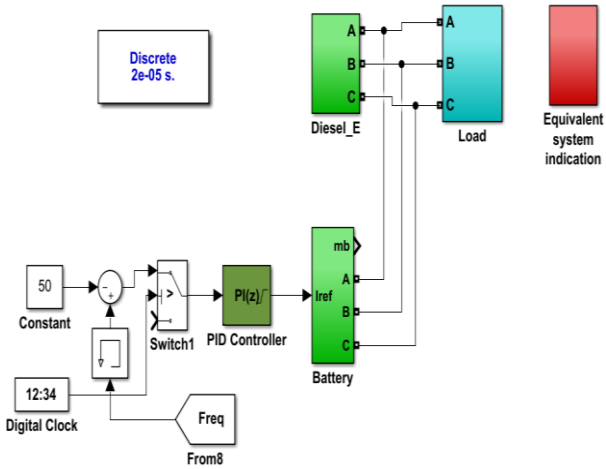

Fig. 2. The equivalent model with diesel and battery system

A. Battery System

After this phenomenon for the Universal bridge and subsystem 1, there needs an input which is taken from the output of the three-phase voltage and the initial determination mask (0.5 mH) at the same time it is connected with the universal bridge's landscape port. In this system, the battery is used and the series RLC Branch and universal bridge all are linked with this battery at the same time it is connected in parallel. In this system, the Li-Ion battery is also used and its normal voltage is 490 V, 600 Ah is its rated capacity, time of the battery response is 30 s and its initial state-of-charge is 92 %. Here shows the Battery system modeling and Lithium-ion battery equivalent circuit.

This Lithium-ion battery-related equivalent circuit is used in this mechanism. In this mechanism, this system is connected with a system and that is, here parallel resistance (R_p), Capacitance (C_p), and internal resistance at the same time and this is connected with a parallel path. This total circuit with its internal resistance and is linked with parallel resistance (R_p) and capacitance (C_p) at the same time it is connected with a parallel connection. This type of circuit is used for the time of charge and discharge transients to simulate transient responses of the battery. In this system, the $V_{OC}(h(t))$ is a function that is nonlinear at the same time the terminal voltage $v_b(t)$ is used for the output measurement.

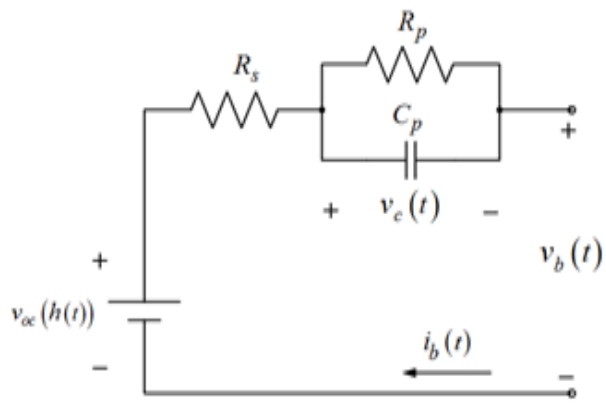

Fig. 4. Equivalent circuit of Lithium-ion battery

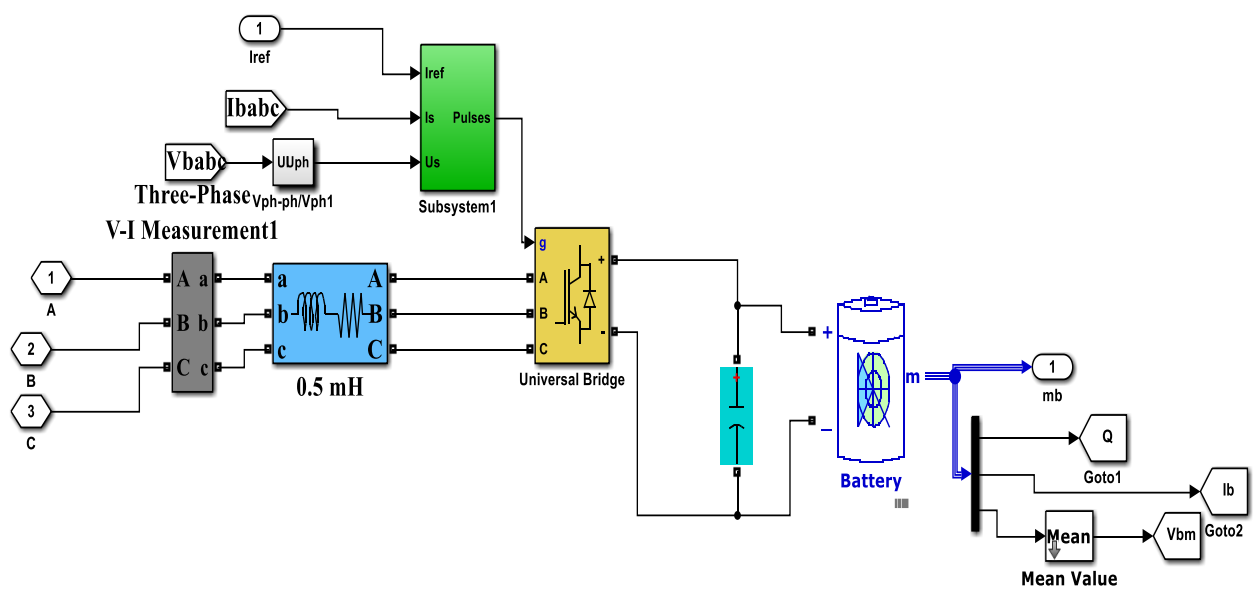

Fig. 3. Modeling of the battery system

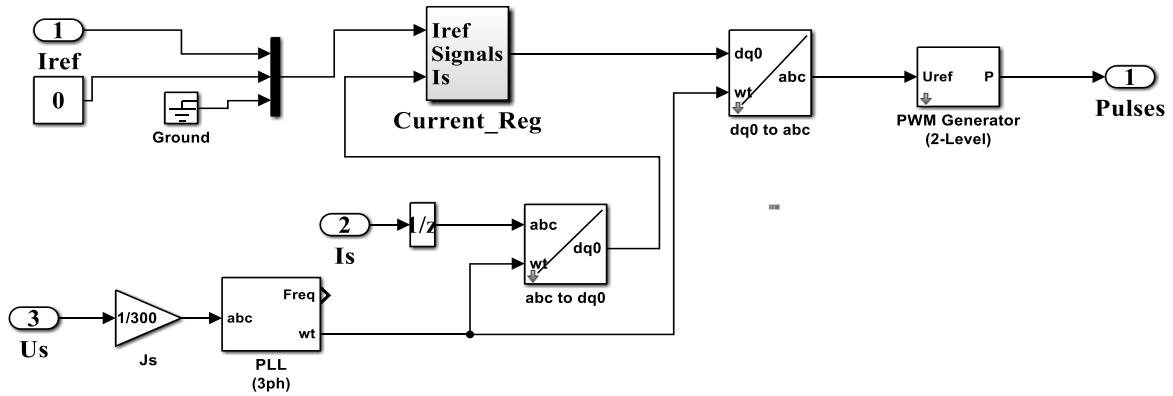

Fig. 5. Modeling of the battery sub-system

B. Diesel Generator System

In a diesel generator's frame structures main elements are governer, indicator, voltage regulator, alternator, synchronous generator, lubrication system, control panel, and excitation. In this system, the three-phase measurement mask is used and it is directly connected with the synchronous generator. All of the output voltage, power of this mechanical, and speed are controlled by this synchronous generator (422 kVA, 230 V) in this system. This figure represents this diesel generator system. In this system, the PGG governor plays a vital role and this governor is used for the speed, power output control of this system.

C. Load System

In this loading system, the radical elements are the three-phase V-I measurement, breaker which is also three-phases, and load. Two types of loads are used in this system and they are Fixed load and dump load. For the absolute data (ref) this paper is used. In this system, the primary load of 200 kW is ready willing and able for all times. This paper finds out the result of this frequency and power consumption from the measurement of the rate of charging the load which is fixed. On the other hand, the dump load or the secondary load are used for the support, or in other words, it is an optional load. When the fixed load cannot complete the full demand the dump load and protect this situation by supplying the required load.

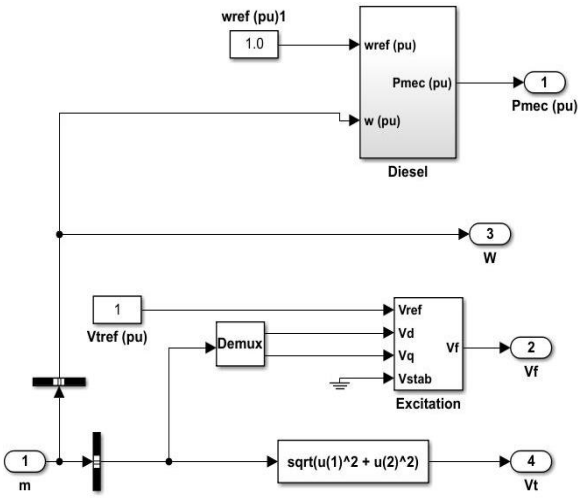

Fig. 7. Diesel and synchronous generator control system

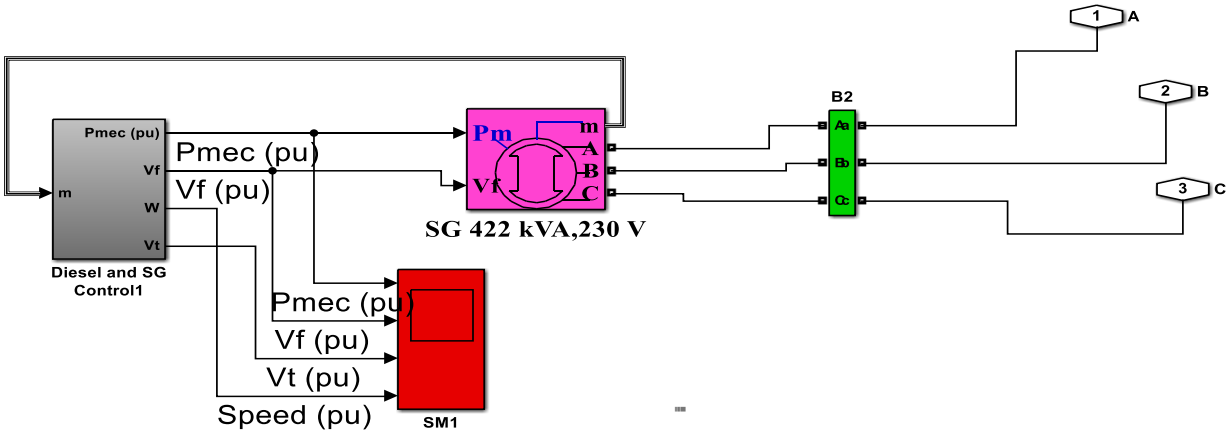

Fig. 6. Modeling of the diesel generator system

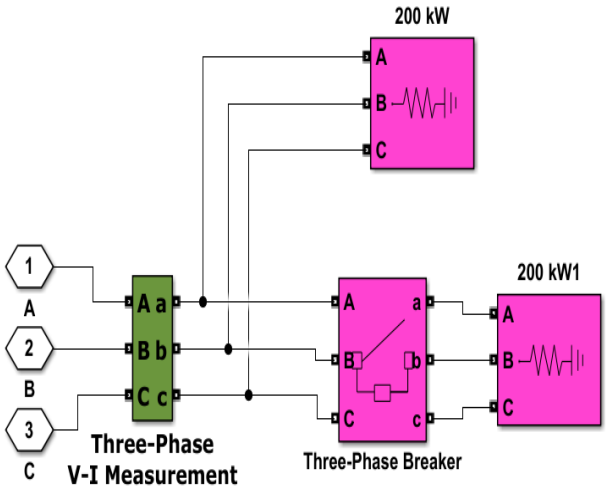

Fig. 8. A basic model of load system

D. *Equivalent System Indication*

Equivalent System Indication's main ingredients are selector, RMS, filter, gain, phase-locked loop, terminator, and 3-phase instantaneous. In this system, the selector or reorder selects the multidimensional input signal and it is associated with the root mean square. It evaluates the exact root mean square value from this input signal and linked it with 2nd order filter. This 2nd order filter's cut-off value is 10 Hz and the damping factor value is 0.707. In this system for the synchronization on a set of variable frequency, evaluations are measured by the phase-locked loop system, the output signal is measured by the terminator and the evaluation of the active and reactive power measurement here used the 3-phase instantaneous. At the end of this system, the system finds out the load voltage, power, and current curve.

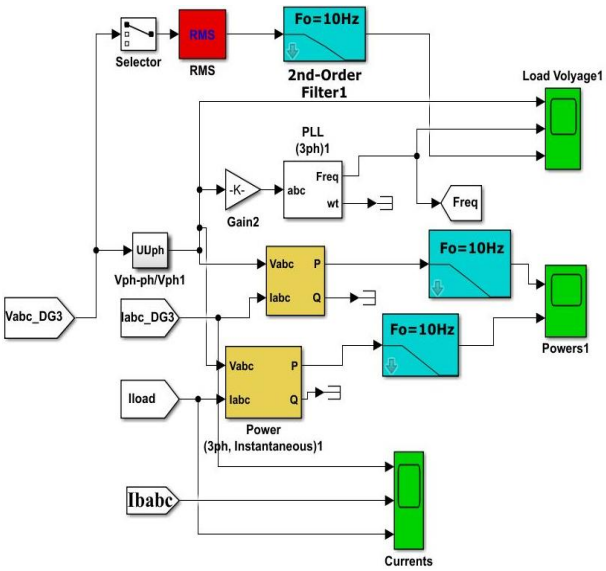

Fig. 9. Modeling of the equivalent system indication

V. Results And Discussions

As usually, microgrid uses a lot of generators that are moved by diesel or microturbine and renewable energy sources. In this time, some systems take a large duration time for a complete simulation. Renewable Energy Source is connected with the power electronics devices and this device needs a short duration of time and it is 10 ms at the same time. For a proper calculation, some minutes is must be required. For the best quality of the determination, it is argent that learns or finds out about the special characteristics of the microgrid. These characteristics have a relationship with the microgrid's frequency and voltage-related change when the event of the discrepancy between the generated and consumed power. From this calculation, the result has an abrupt change when the load opens and off the generating devices. The fundamental boundary describing the soundness of the microgrid is the frequency differences that occur when there is an unexpected bungle between the created and devoured power at that, the voltage shifts are minor significant because they are effectively and immediately find out the controllers of the generator excitation frameworks. The desirable matter is that the microgrid can fastest process for then estimation of the process of changing the frequency for the noticed disturbance. The synchronous generators, their inertial masses, and their all primary engine control systems (turbine-governor systems) keep a complete impact for the main term of this dynamics of the time of the frequency change. Consequently, it appears to be sensible to supplant the total microgrid with one identical coordinated generator with its necessary mover, whose reaction to stack unsettling influence will be near the reaction of the total configuration under an equivalent aggravation.

Here noticed that this type of simplified model is used for the development of the quality of this microgrid and this development can reduce the frequency of deviation when the load varies with a constant rate. In this model, this battery is spent for gaining a goal and that is the control circuit. This control circuit gets this all data from DieselH4. The estimation cycle dials back, individually since the work of the inverter requires a decrease of the testing time, yet it runs, at any rate, quicker in this improved model. Figures 10, 13-14 represent this process with a descriptive way of this model. It represents that the diesel little by little tasks the complete amount of load; the maximum frequency deviation which is decreased from 5 Hz to 2 Hz, the frequency restores from 2-2.5 s. In the wake of doing reproduction, it very well may be seen that the frequency change is practically equivalent to displayed in Fig, in any case, the reproduction is

performed multiple times more slowly than in the model when it is associated with the battery. As referenced above, the distinction will increment with the complexity of the hybrid framework.

Figure 16 shows a graph of time vs. RSM load voltage. In this place, after 0 (zero) seconds, the RSM load voltage is very high, and then, after a very short period, the RSM load voltage is quite low, compared to the high value. This RSM load voltage is low 200-250 V for around 1 second. Then this value remains constant between 1 and 5 seconds. Then, from 5 to 6 seconds, it has a variable value of 200-250 V, and from 6 to 10 seconds, it has a constant value of 200-250 V.

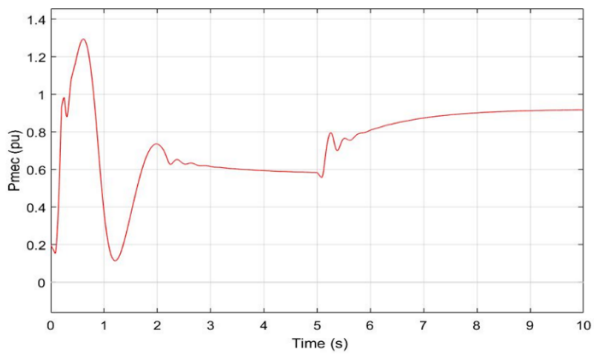

Fig. 10. Diesel power

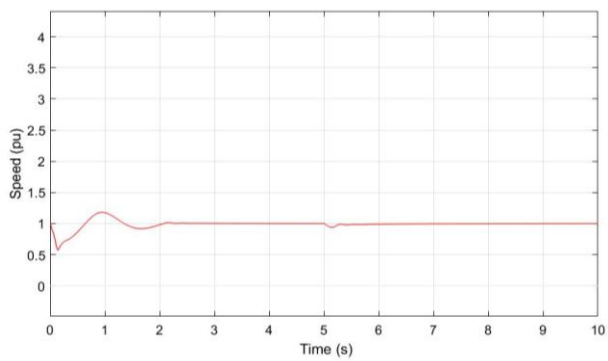

Fig. 11. Synchronous generator speed

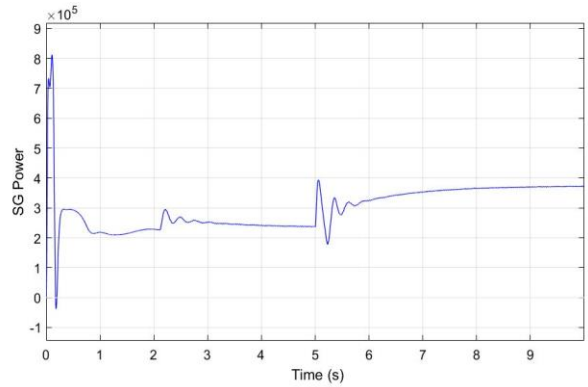

Fig. 12. Synchronous generator power

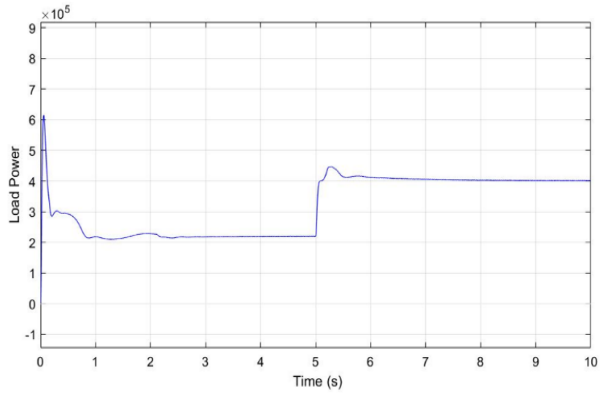

Fig. 13. Load power

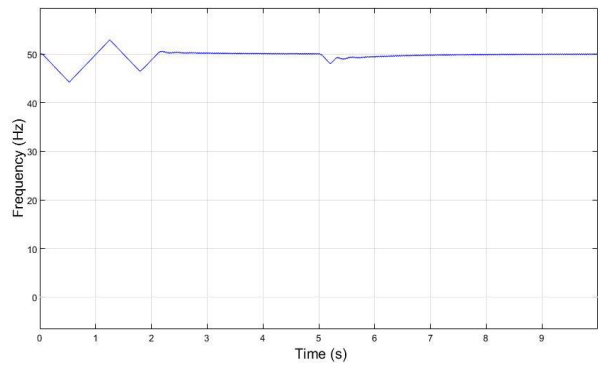

Fig. 14. Load frequency

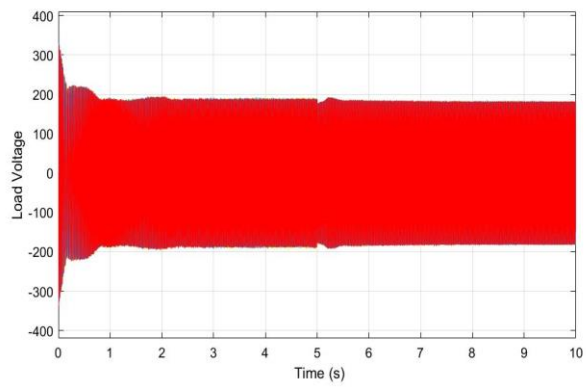

Fig. 15. Load voltage

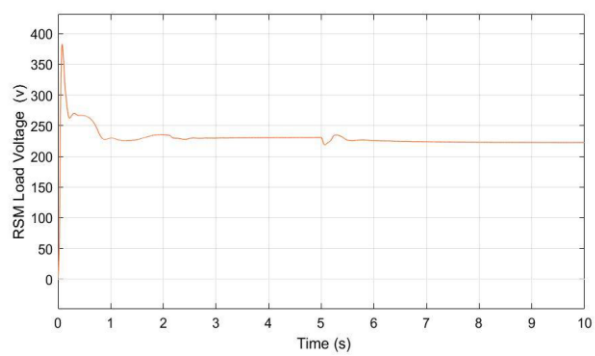

Fig. 16. RMS load voltage

VI. Conclusion

The microgrid comparable model with battery framework can top off the all power interest in a secluded region. This disconnected region isn't associated with public lattice. As a result, this framework is simpler to fulfill all power interests. A conditional model of diesel generator with battery control furthermore, execution is planned by utilizing MATLAB/Simulink. From the exploration work, Diesel Generator framework with Li-ion battery energy storage framework to supply the heap when the energy gained from diesel generator is lacking to meet the fundamental burden. From the exploration work, result examination about diesel power, load force, load frequency, and RMS load voltage. The represent technique infers that microgrid is the simplest interaction and dependable to tackle the secluded region power issue.

References

[1] "Statistical Review of World Energy | Energy economics | Home." https://www.bp.com/en/global/corporate/energy-economics/statistical-review-of-world-energy.html (accessed Jun. 30, 2021).

[2] D. Ghosh and A. H. Shatil, "Modelling and Analysis of a Microgrid with Diesel Generator and Battery System," *2021 2nd International Conference on Robotics, Electrical and Signal Processing Techniques (ICREST)*, 2021, pp. 81-84, doi: 10.1109/ICREST51555.2021.9331110..

[3] M. S. Hossain Lipu and A. M. Waliullah Bhuiyan, "Electricity access in urban slum households of Bangladesh: A case of Dhaka," *J. Renew. Sustain. Energy*, vol. 6, no. 5, pp. 1–15, 2014, DOI: 10.1063/1.4896697.

[4] M. S. H. Liu, P. Shrestha, and S. Kumar, "Energy poverty and access to modern energy of urban poor: A case of Dhaka, Bangladesh," *Int. J. Energy Technol. Policy*, vol. 12, no. 3, pp. 270–294, 2016, DOI: 10.1504/IJETP.2016.077383.

[5] P. K. Halder, N. Paul, M. U. H. Joardder, and M. Sarker, "Energy scarcity and potential of renewable energy in Bangladesh," *Renew. Sustain. Energy Rev.*, vol. 51, pp. 1636–1649, 2015, DOI: https://doi.org/10.1016/j.rser.2015.07.069.

[6] F. Ahmed, A. Q. Al Amin, M. Hasanuzzaman, and R. Saidur, "Alternative energy resources in Bangladesh and prospect," *Renew. Sustain. Energy Rev.*, vol. 25, pp. 698–707, 2013, DOI: https://doi.org/10.1016/j.rser.2013.05.008.

[7] M. R. Aktar, A. Jahid, M. F. Hossain, and M. Al-Hasan, "Energy Sustainable Traffic-Aware Hybrid Powered Off-Grid Cloud Radio Access Network," in *2018 International Conference on Innovations in Science, Engineering and Technology (ICISET)*, 2018, pp. 121–125, DOI: 10.1109/ICISET.2018.8745631.

[8] M. R. Aktar, A. Jahid, M. Al-Hasan, and M. F. Hossin, "User Association for Efficient Utilization of Green Energy in Cloud Radio Access Network," in *2019 International Conference on Electrical, Computer and Communication Engineering (ECCE)*, 2019, pp. 1–5, DOI: 10.1109/ECACE.2019.8679128.

[9] A. Jahid, A. Bin Shams, and M. F. Hossain, "PV-powered CoMP-based green cellular networks with a standby grid supply," *Int. J. Photoenergy*, vol. 2017, 2017, DOI: 10.1155/2017/6189468.

[10] M. S. Ferdous, K. A. Sagar, F. R. Bin Karim, and M. M. Rashed, "A case study on the present scenario of biomass energy in Bangladesh and its prospect," in *2nd International Conference on Green Energy and Technology*, 2014, pp. 95–98, DOI: 10.1109/ICGET.2014.6966671.

[11] M. S. H. Lipu, M. Shazib Uddin, and M. A. R. Miah, "A feasibility study of the solar-wind-diesel hybrid system in rural and remote areas of Bangladesh," *Int. J. Renew. Energy Res.*, vol. 3, no. 4, pp. 892–900, 2013, DOI: 10.20508/ijrer.21057.

[12] E. Hossain, E. Kabalci, R. Bayindir, and R. Perez, "A comprehensive study on microgrid technology," *Int. J. Renew. Energy Res.*, vol. 4, no. 4, pp. 1094–1104, 2014, DOI: 10.20508/ijrer.20561.

[13] "Com_Cox\'s Bazar.pdf - বাংলাদশে পরসিংখ্যান ব্যুরো-গণপ্রজাতন্ত্রী বাংলাদশে সরকার." http://www.bbs.gov.bd/WebTestApplication/PopCen2011/Com_Cox's Bazar.pdf (accessed Jul. 03, 2021).

[14] U. S. Mousumi, A. Zardari, and K. Z. Islam, "Techno-Economic Evaluation of Hybrid Supply System for Sustainable Powering the Saint Martin Island in Bangladesh," vol. 1, no. 1, pp. 9–23, 2020.

Debashish Ghosh completed his Bachelor of Science in Electrical and Electronic Engineering (EEE) from American International University Bangladesh (AIUB) in 2017. Currently, he completed a Master of Science in Electrical and Electronic Engineering from the same university. He is working as an Asst. Chief Technology Officer at Radiological Solution Bangladesh- GE, Siemens, Hitachi and Toshiba (X-ray, CT Scan and MRI) machines network configuration to transfer the DICOM image. His research interest includes power system, biomedical engineering (CT Scan and MRI) telecommunications, programming and IoT, etc.

Abu Hena Md. Shatil has been serving as an Assistant Professor in the Department of Electrical and Electronic Engineering of American International University (AIUB). He completed his Master of Science in Electrical and Electronic Engineering (MEEE) from Cardiff University, UK.